PU350

UNDERGROUND GATE OPENER

DC

LEAVES UP TO 3.5M

UP TO KG 350KG

RELEASE DEVICE

NESSA™

PU350

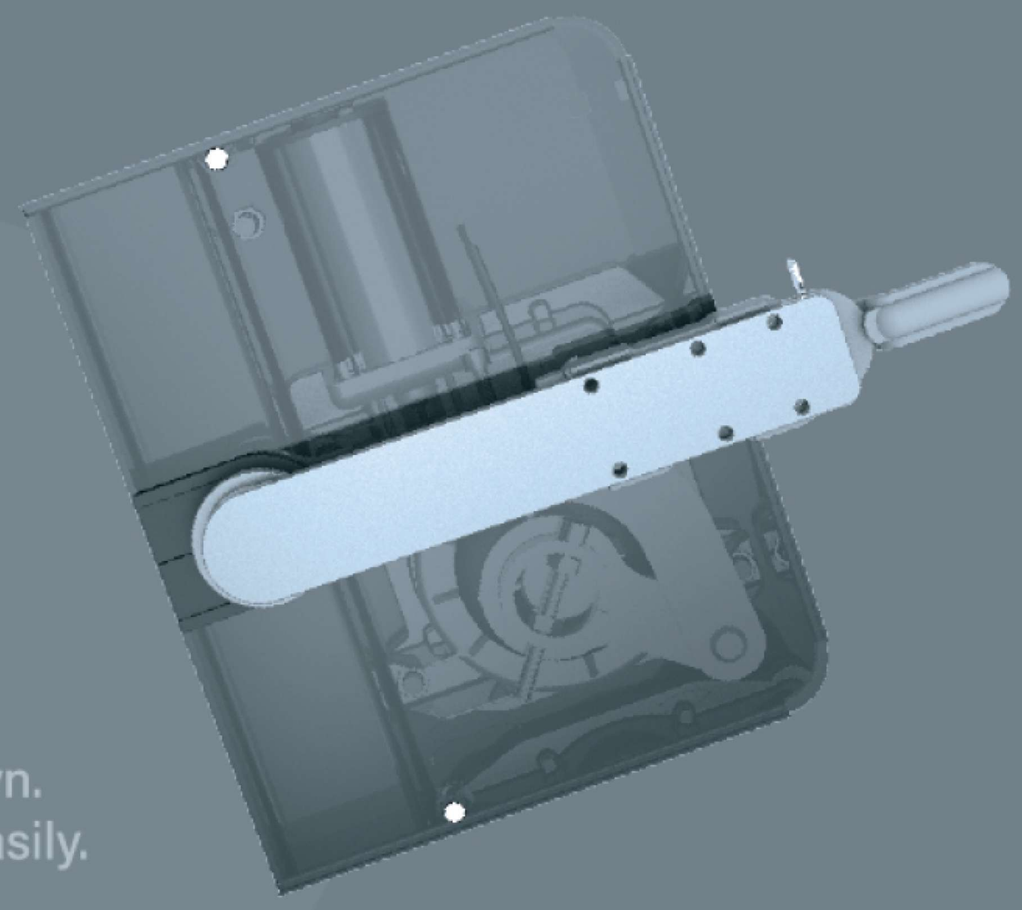

THE INVISIBLE OPERATOR FOR SWING GATE

Designed to operate down below the ground which has no apparent motor structure attached on the gate.
DC swing system for better speed adjustment and slow down.
Adjustable Open and Close points to determine the travel easily.
Key release design for power failure.

Safe & Easy To Operate

Compatible with safety device and access control system.
Easy parameters adjusting with digits led display and buttons.
6 categories / 20+ parameters meet the request of different gates.

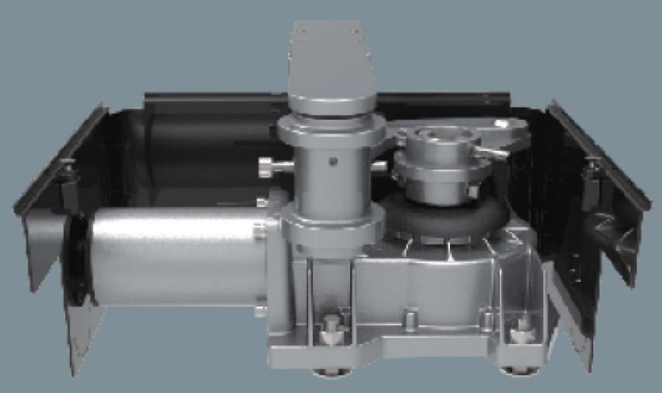

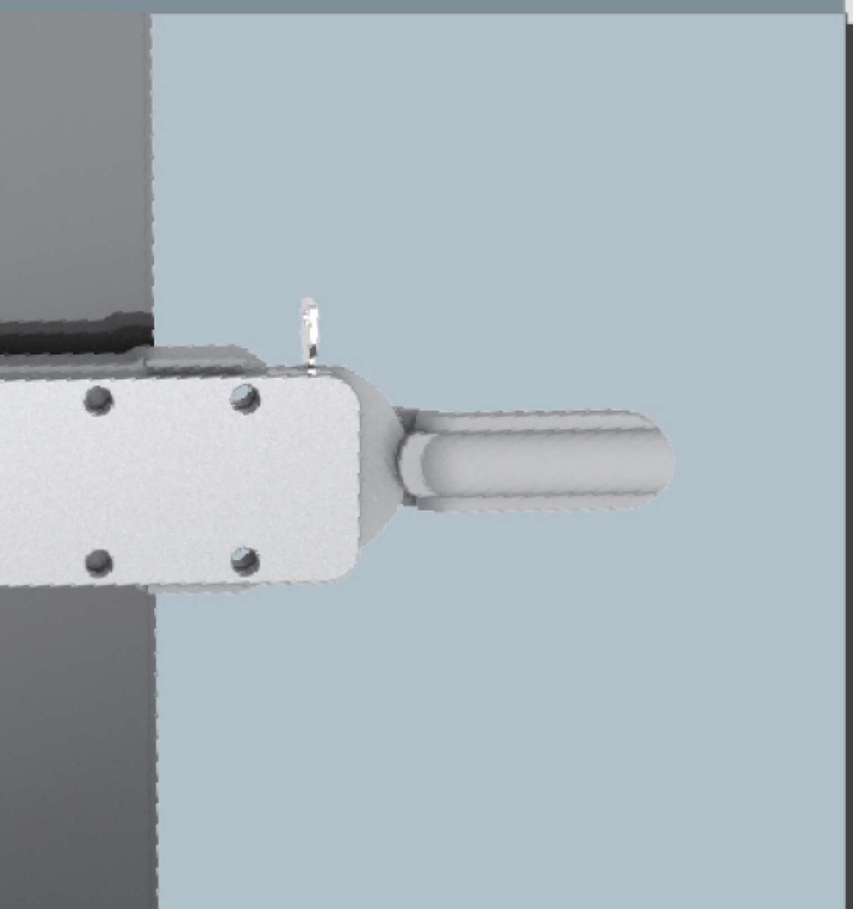

Motor	PU350
Category	Underground door opener
Max gate length / Max gate weight	3.5M , 350kg
Power Supply	110-240Vac (50-60Hz)
Motor Power Supply	24Vdc
Gear type	Worm gear
Duty cycle	50%
IP Rating	IPX7
Working / Operating temperature	-20~50°C
Current (A)	10.5A
Power (W)	250W
Manual release	Key
Dimensions	389x320x222mm